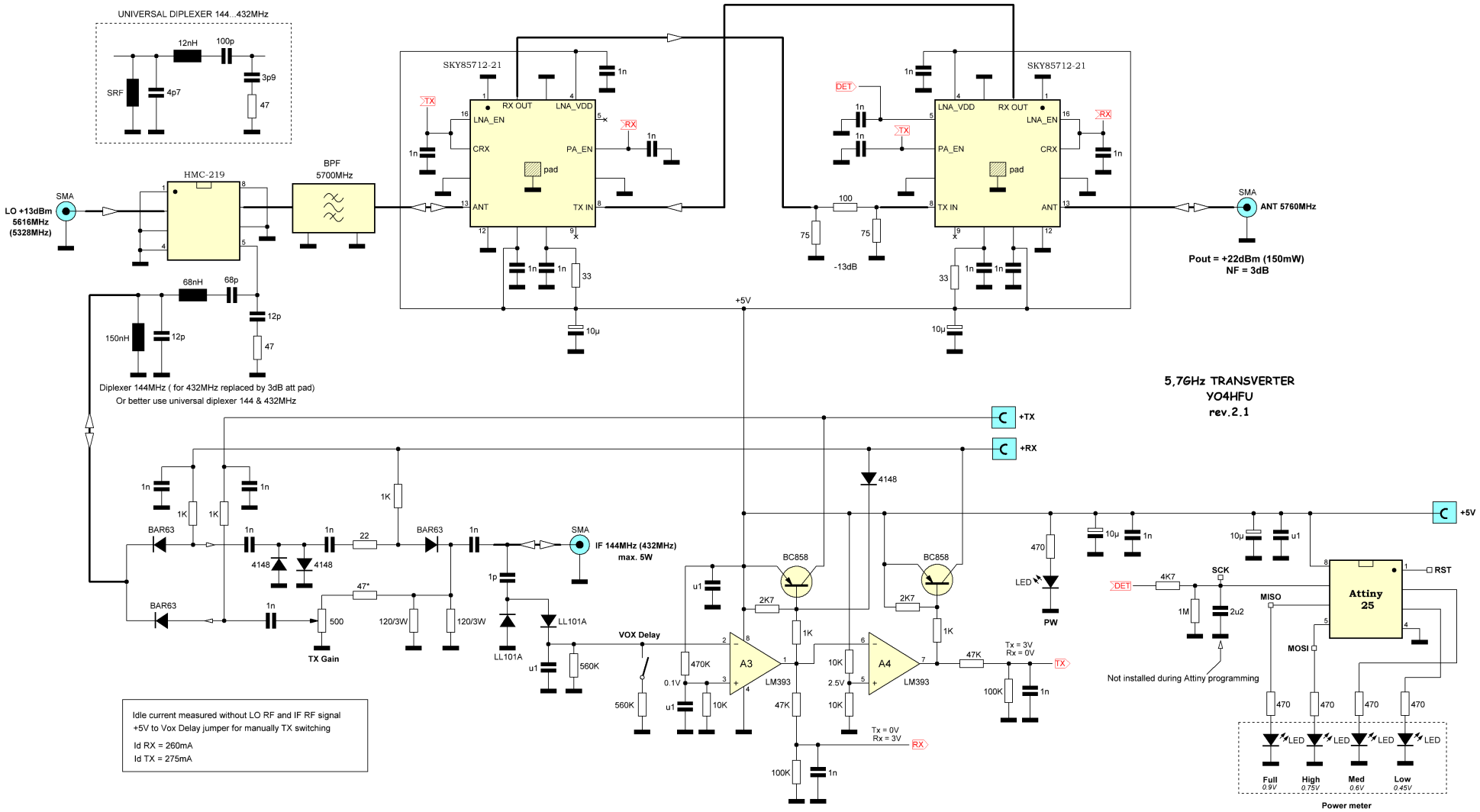
UNIVERSAL DIPLEXER 144...432MHz
12nH
100p
3p9
SRF
4p7
47
SKY85712-21
RX OUT
LNA_VDD
LNA_EN
CRX
PA_EN
pad
ANT
TX IN
TX
RX
DET
1n
33
10µ
+5V
100
75
-13dB
SMA
LO +13dBm
5616MHz
(5328MHz)
HMC-219
BPF
5700MHz
ANT 5760MHz
Pout = +22dBm (150mW)
NF = 3dB
68nH
68p
12p
150nH
47
Diplexer 144MHz (for 432MHz replaced by 3dB att pad)
Or better use universal diplexer 144 & 432MHz
5,7GHz TRANSVERTER
YO4HFU
rev.2.1
+TX
+RX
+5V
1K
BAR63
22
4148
47*
500
TX Gain
120/3W
1p
LL101A
IF 144MHz (432MHz)
max. 5W
VOX Delay
560K
470K
0.1V
u1
10K
A3
LM393
BC858
2K7
47K
100K
Tx = 0V
Rx = 3V
A4
2.5V
Tx = 3V
Rx = 0V
470
LED
PW
4K7
1M
2u2
SCK
MISO
MOSI
RST
Attiny
25
Not installed during Attiny programming
Full
0.9V
High
0.75V
Med
0.6V
Low
0.45V
Power meter
Idle current measured without LO RF and IF RF signal
+5V to Vox Delay jumper for manually TX switching
Id RX = 260mA
Id TX = 275mA